2012 GMC Truck Sierra 1500 4WD V8-5.3L

Vehicle > Powertrain Management > Diagrams > Electrical - Interactive Color (Non OE)

Engine Controls

Page 1 of 6

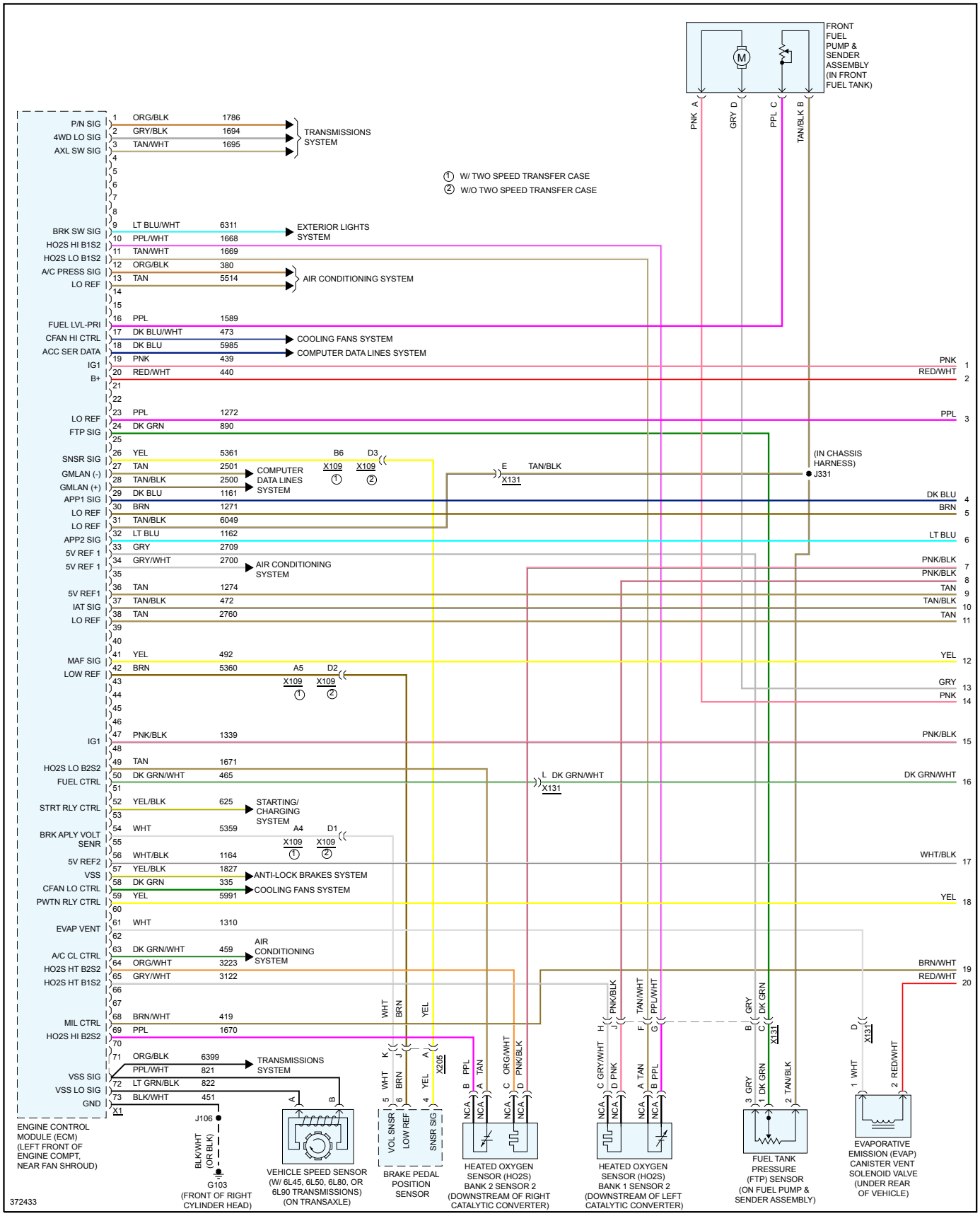
FRONT FUEL PUMP & SENDER ASSEMBLY (IN FRONT FUEL TANK)
PNK A
GRY D
PPL C
TAN/BLK B
P/N SIG 1 ORG/BLK 1786
4WD LO SIG 2 GRY/BLK 1694
AXL SW SIG 3 TAN/WHT 1695
TRANSMISSIONS SYSTEM
① W/ TWO SPEED TRANSFER CASE
② W/O TWO SPEED TRANSFER CASE
BRK SW SIG 9 LT BLU/WHT 6311
EXTERIOR LIGHTS SYSTEM
HO2S HI B1S2 10 PPL/WHT 1668
HO2S LO B1S2 11 TAN/WHT 1669
A/C PRESS SIG 12 ORG/BLK 380
LO REF 13 TAN 5514
AIR CONDITIONING SYSTEM
FUEL LVL-PRI 16 PPL 1589
CFAN HI CTRL 17 DK BLU/WHT 473
ACC SER DATA 18 DK BLU 5985
COOLING FANS SYSTEM
COMPUTER DATA LINES SYSTEM
IG1 19 PNK 439
B+ 20 RED/WHT 440
LO REF 23 PPL 1272
FTP SIG 24 DK GRN 890
SNSR SIG 26 YEL 5361
GMLAN (-) 27 TAN 2501
GMLAN (+) 28 TAN/BLK 2500
APP1 SIG 29 DK BLU 1161
LO REF 30 BRN 1271
LO REF 31 TAN/BLK 6049
APP2 SIG 32 LT BLU 1162
5V REF 1 33 GRY 2709
5V REF 1 34 GRY/WHT 2700
AIR CONDITIONING SYSTEM
5V REF1 36 TAN 1274
IAT SIG 37 TAN/BLK 472
LO REF 38 TAN 2760
MAF SIG 41 YEL 492
LOW REF 42 BRN 5360
IG1 47 PNK/BLK 1339
HO2S LO B2S2 49 TAN 1671
FUEL CTRL 50 DK GRN/WHT 465
STRT RLY CTRL 52 YEL/BLK 625
STARTING/ CHARGING SYSTEM
BRK APLY VOLT SENR 54 WHT 5359
5V REF2 56 WHT/BLK 1164
VSS 57 YEL/BLK 1827
CFAN LO CTRL 58 DK GRN 335
PWTN RLY CTRL 59 YEL 5991
ANTI-LOCK BRAKES SYSTEM
EVAP VENT 61 WHT 1310
A/C CL CTRL 63 DK GRN/WHT 459
HO2S HT B2S2 64 ORG/WHT 3223
HO2S HT B1S2 65 GRY/WHT 3122
AIR CONDITIONING SYSTEM
MIL CTRL 68 BRN/WHT 419
HO2S HI B2S2 69 PPL 1670
VSS SIG 71 ORG/BLK 6399
VSS LO SIG 72 PPL/WHT 821
GND 73 LT GRN/BLK 822
BLK/WHT 451
TRANSMISSIONS SYSTEM
X1
ENGINE CONTROL MODULE (ECM) (LEFT FRONT OF ENGINE COMPT, NEAR FAN SHROUD)
J106
BLK/WHT (OR BLK)
G103 (FRONT OF RIGHT CYLINDER HEAD)
VEHICLE SPEED SENSOR (W/ 6L45, 6L50, 6L80, OR 6L90 TRANSMISSIONS) (ON TRANSAXLE)
BRAKE PEDAL POSITION SENSOR
VOL SNSR
LOW REF
SNSR SIG
X205
HEATED OXYGEN SENSOR (HO2S) BANK 2 SENSOR 2 (DOWNSTREAM OF RIGHT CATALYTIC CONVERTER)
HEATED OXYGEN SENSOR (HO2S) BANK 1 SENSOR 2 (DOWNSTREAM OF LEFT CATALYTIC CONVERTER)
FUEL TANK PRESSURE (FTP) SENSOR (ON FUEL PUMP & SENDER ASSEMBLY)
EVAPORATIVE EMISSION (EVAP) CANISTER VENT SOLENOID VALVE (UNDER REAR OF VEHICLE)
(IN CHASSIS HARNESS) J331
E TAN/BLK X131
L DK GRN/WHT X131
B6 D3 X109 ① X109 ②
A5 D2 X109 ① X109 ②
A4 D1 X109 ① X109 ②
PNK 1
RED/WHT 2
PPL 3
DK BLU 4
BRN 5
LT BLU 6
PNK/BLK 7
PNK/BLK 8
TAN 9
TAN/BLK 10
TAN 11
YEL 12
GRY 13
PNK 14
PNK/BLK 15
DK GRN/WHT 16
WHT/BLK 17
YEL 18
BRN/WHT 19
RED/WHT 20
372433

Page 2 of 6

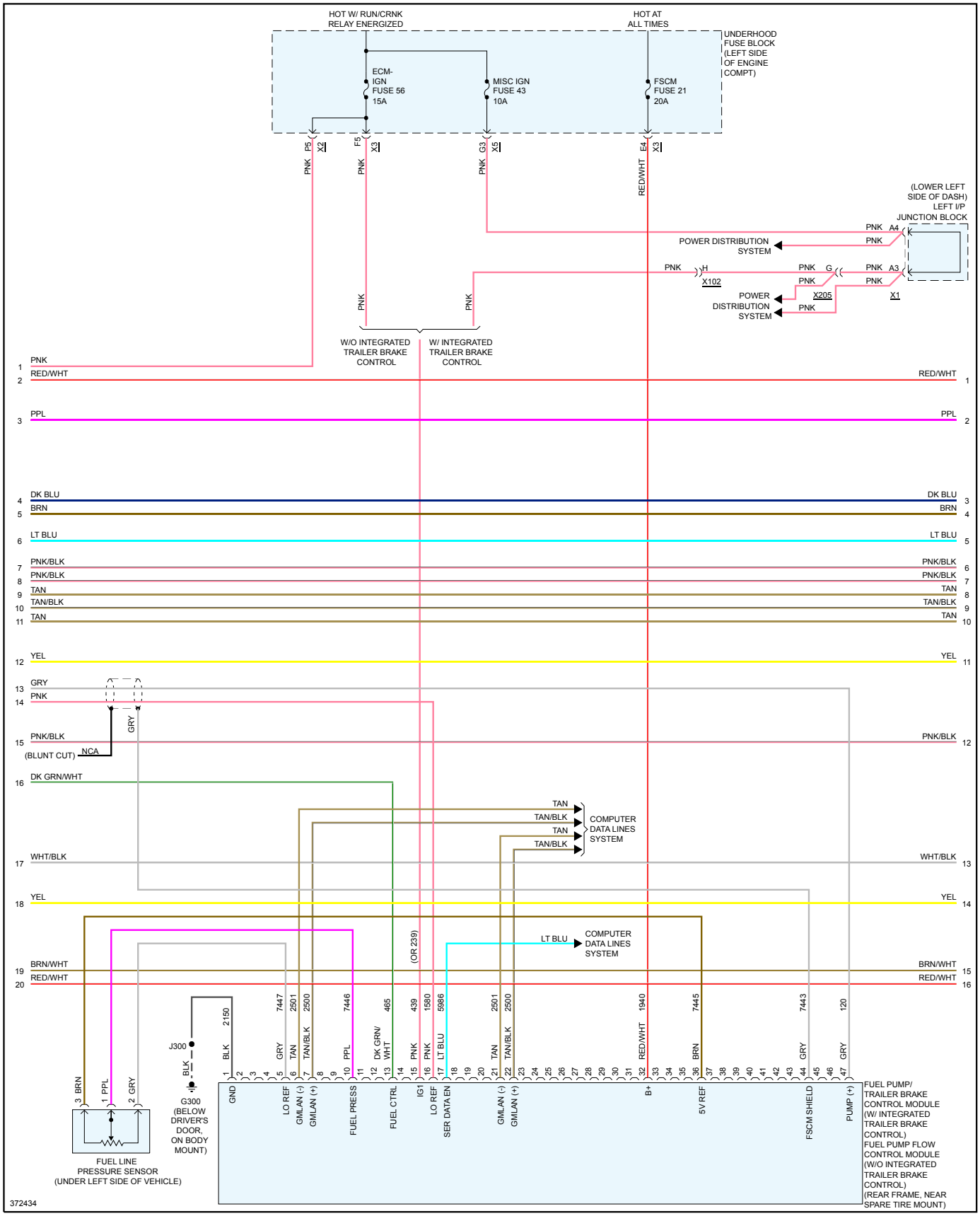
HOT W/ RUN/CRNK RELAY ENERGIZED
HOT AT ALL TIMES
UNDERHOOD FUSE BLOCK (LEFT SIDE OF ENGINE COMPT)
ECM-IGN FUSE 56 15A
MISC IGN FUSE 43 10A
FSCM FUSE 21 20A
(LOWER LEFT SIDE OF DASH) LEFT I/P JUNCTION BLOCK
POWER DISTRIBUTION SYSTEM
W/O INTEGRATED TRAILER BRAKE CONTROL
W/ INTEGRATED TRAILER BRAKE CONTROL
(BLUNT CUT) NCA
COMPUTER DATA LINES SYSTEM
(OR 239)
FUEL LINE PRESSURE SENSOR (UNDER LEFT SIDE OF VEHICLE)
G300 (BELOW DRIVER'S DOOR, ON BODY MOUNT)
FUEL PUMP/ TRAILER BRAKE CONTROL MODULE (W/ INTEGRATED TRAILER BRAKE CONTROL)
FUEL PUMP FLOW CONTROL MODULE (W/O INTEGRATED TRAILER BRAKE CONTROL) (REAR FRAME, NEAR SPARE TIRE MOUNT)
372434

Page 3 of 6

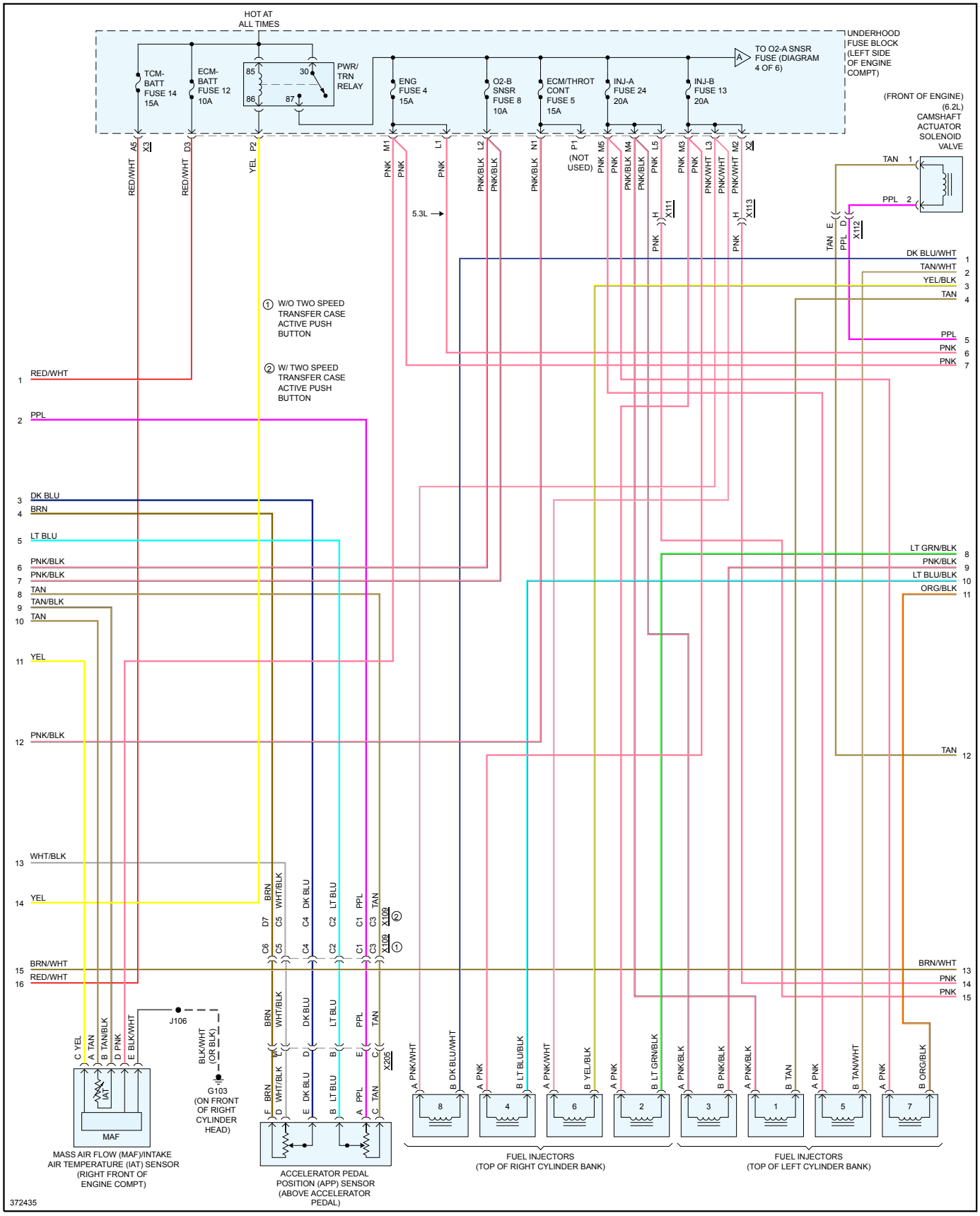
HOT AT ALL TIMES
TCM-BATT FUSE 14 15A
ECM-BATT FUSE 12 10A
PWR/TRN RELAY
ENG FUSE 4 15A
O2-B SNSR FUSE 8 10A
ECM/THROT CONT FUSE 5 15A
INJ-A FUSE 24 20A
INJ-B FUSE 13 20A
TO O2-A SNSR FUSE (DIAGRAM 4 OF 6)
UNDERHOOD FUSE BLOCK (LEFT SIDE OF ENGINE COMPT)
(FRONT OF ENGINE) (6.2L) CAMSHAFT ACTUATOR SOLENOID VALVE
(NOT USED)
5.3L
W/O TWO SPEED TRANSFER CASE ACTIVE PUSH BUTTON
W/ TWO SPEED TRANSFER CASE ACTIVE PUSH BUTTON
MAF
IAT
MASS AIR FLOW (MAF)/INTAKE AIR TEMPERATURE (IAT) SENSOR (RIGHT FRONT OF ENGINE COMPT)
G103 (ON FRONT OF RIGHT CYLINDER HEAD)
ACCELERATOR PEDAL POSITION (APP) SENSOR (ABOVE ACCELERATOR PEDAL)
FUEL INJECTORS (TOP OF RIGHT CYLINDER BANK)
FUEL INJECTORS (TOP OF LEFT CYLINDER BANK)
372435

Page 4 of 6

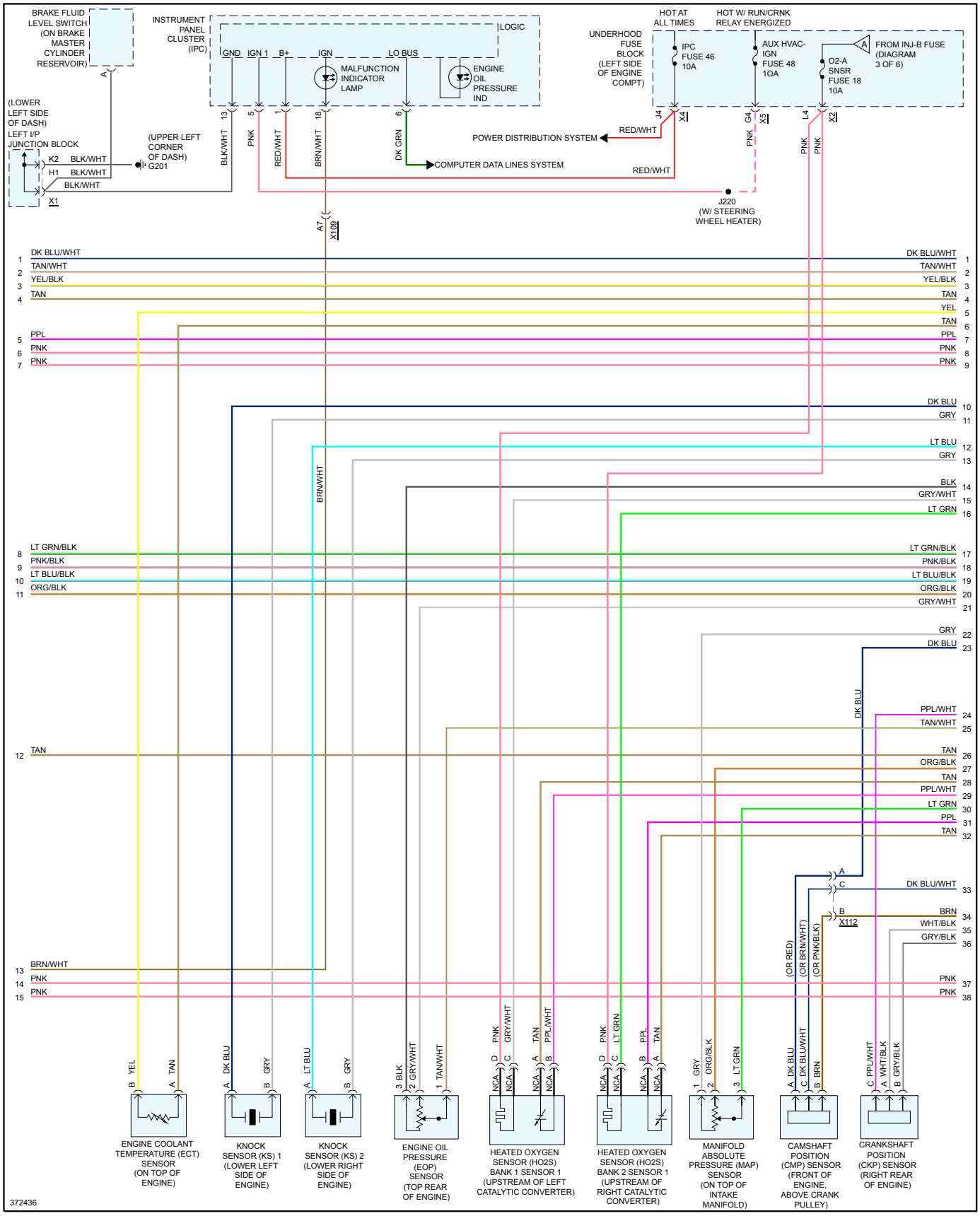
BRAKE FLUID LEVEL SWITCH (ON BRAKE MASTER CYLINDER RESERVOIR)
INSTRUMENT PANEL CLUSTER (IPC)
LOGIC
GND
IGN 1
B+
IGN
LO BUS
MALFUNCTION INDICATOR LAMP
ENGINE OIL PRESSURE IND
UNDERHOOD FUSE BLOCK (LEFT SIDE OF ENGINE COMPT)
HOT AT ALL TIMES
HOT W/ RUN/CRNK RELAY ENERGIZED
IPC FUSE 46 10A
AUX HVAC-IGN FUSE 48 10A
O2-A SNSR FUSE 18 10A
FROM INJ-B FUSE (DIAGRAM 3 OF 6)
(LOWER LEFT SIDE OF DASH) LEFT I/P JUNCTION BLOCK
(UPPER LEFT CORNER OF DASH) G201
POWER DISTRIBUTION SYSTEM
COMPUTER DATA LINES SYSTEM
J220 (W/ STEERING WHEEL HEATER)
ENGINE COOLANT TEMPERATURE (ECT) SENSOR (ON TOP OF ENGINE)
KNOCK SENSOR (KS) 1 (LOWER LEFT SIDE OF ENGINE)
KNOCK SENSOR (KS) 2 (LOWER RIGHT SIDE OF ENGINE)
ENGINE OIL PRESSURE (EOP) SENSOR (TOP REAR OF ENGINE)
HEATED OXYGEN SENSOR (HO2S) BANK 1 SENSOR 1 (UPSTREAM OF LEFT CATALYTIC CONVERTER)
HEATED OXYGEN SENSOR (HO2S) BANK 2 SENSOR 1 (UPSTREAM OF RIGHT CATALYTIC CONVERTER)
MANIFOLD ABSOLUTE PRESSURE (MAP) SENSOR (ON TOP OF INTAKE MANIFOLD)
CAMSHAFT POSITION (CMP) SENSOR (FRONT OF ENGINE, ABOVE CRANK PULLEY)
CRANKSHAFT POSITION (CKP) SENSOR (RIGHT REAR OF ENGINE)
372436

Page 5 of 6

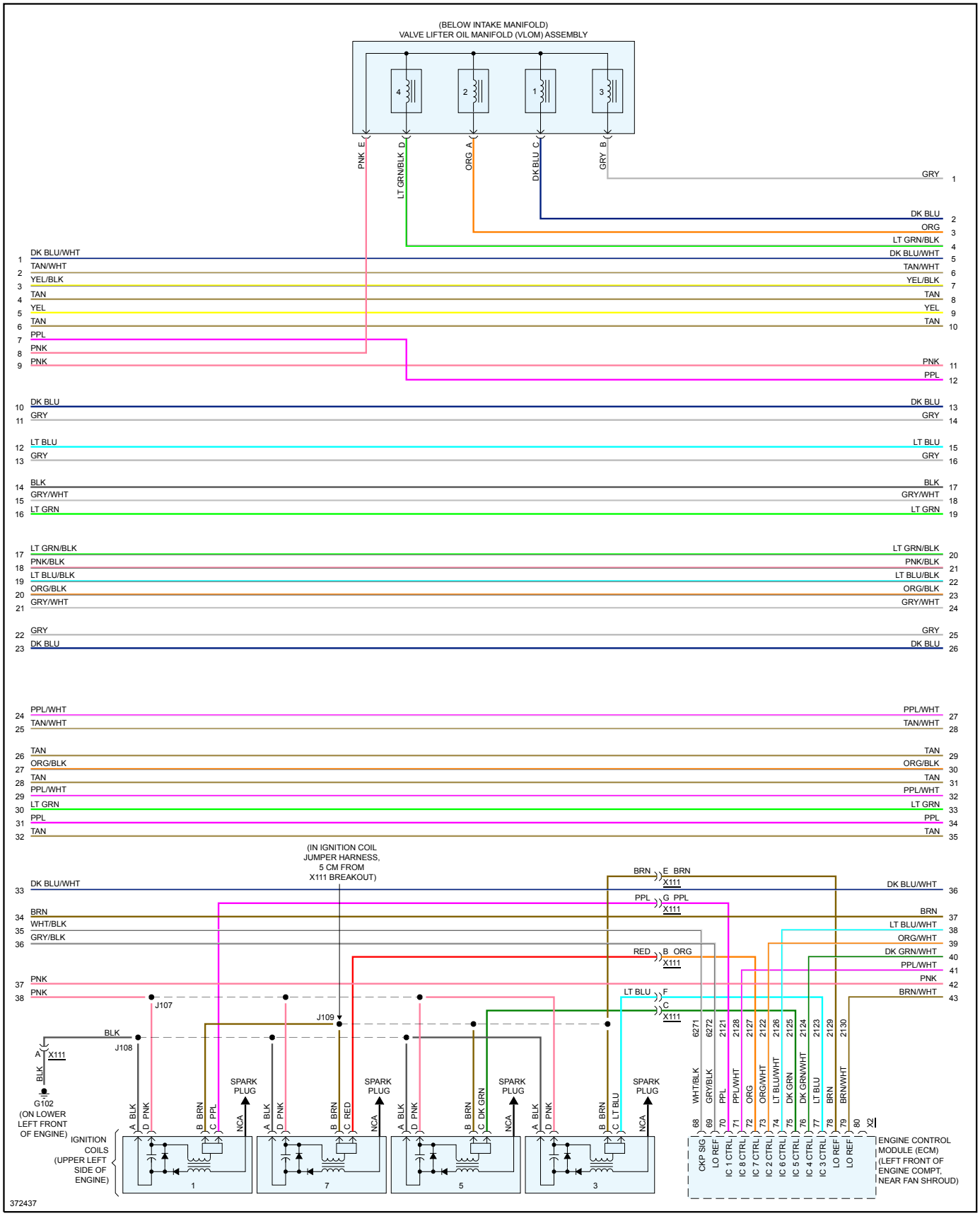
(BELOW INTAKE MANIFOLD)
VALVE LIFTER OIL MANIFOLD (VLOM) ASSEMBLY
(IN IGNITION COIL JUMPER HARNESS, 5 CM FROM X111 BREAKOUT)
IGNITION COILS (UPPER LEFT SIDE OF ENGINE)
SPARK PLUG
G102 (ON LOWER LEFT FRONT OF ENGINE)
ENGINE CONTROL MODULE (ECM) (LEFT FRONT OF ENGINE COMPT, NEAR FAN SHROUD)
CKP SIG
LO REF
IC 1 CTRL
IC 8 CTRL
IC 7 CTRL
IC 2 CTRL
IC 6 CTRL
IC 5 CTRL
IC 4 CTRL
IC 3 CTRL
372437

Page 6 of 6

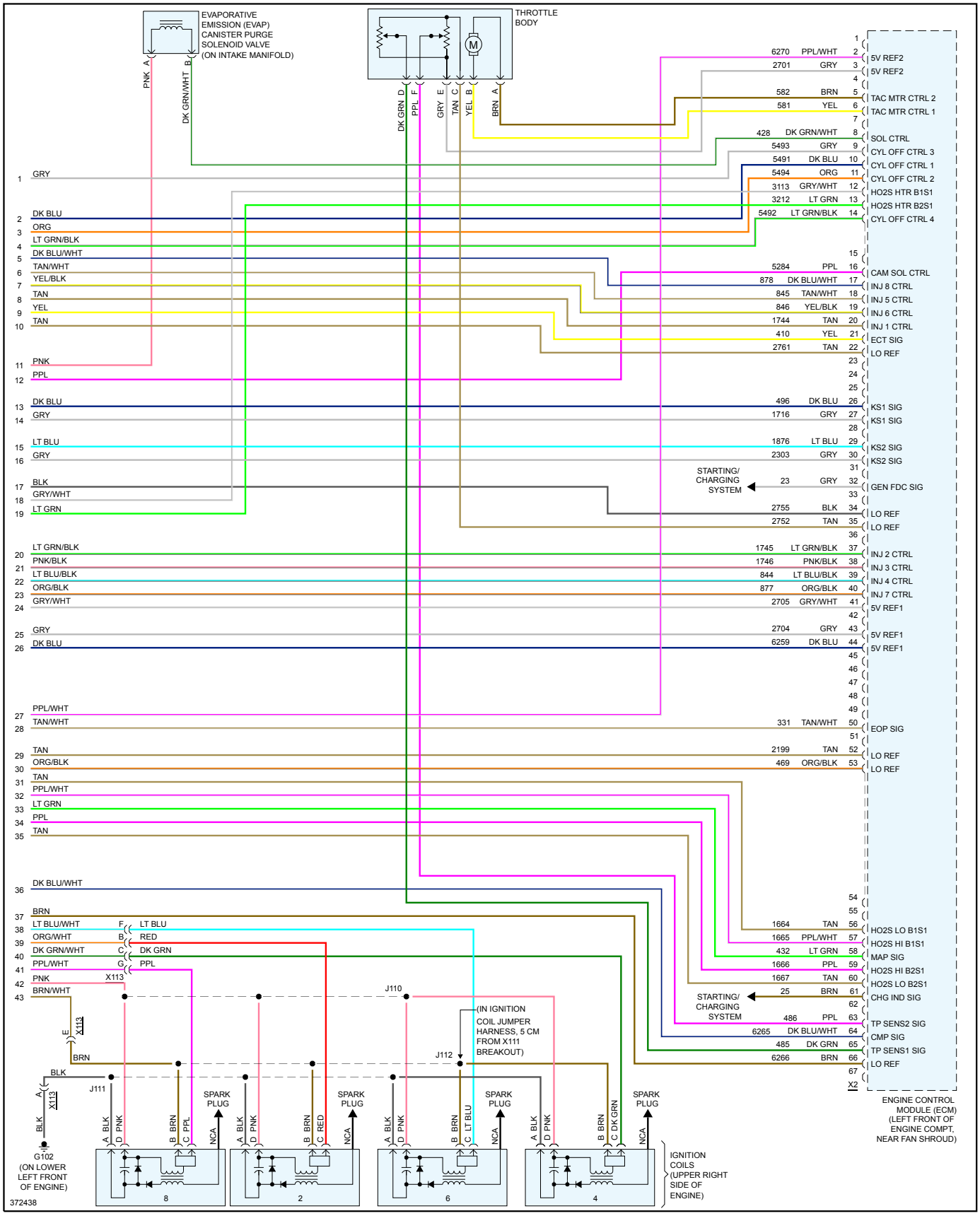
EVAPORATIVE EMISSION (EVAP) CANISTER PURGE SOLENOID VALVE (ON INTAKE MANIFOLD)
THROTTLE BODY
ENGINE CONTROL MODULE (ECM) (LEFT FRONT OF ENGINE COMPT, NEAR FAN SHROUD)
5V REF2
TAC MTR CTRL 2
TAC MTR CTRL 1
SOL CTRL
CYL OFF CTRL 3
CYL OFF CTRL 1
CYL OFF CTRL 2
HO2S HTR B1S1
HO2S HTR B2S1
CYL OFF CTRL 4
CAM SOL CTRL
INJ 8 CTRL
INJ 5 CTRL
INJ 6 CTRL
INJ 1 CTRL
ECT SIG
LO REF
KS1 SIG
KS2 SIG
STARTING/ CHARGING SYSTEM
GEN FDC SIG
INJ 2 CTRL
INJ 3 CTRL
INJ 4 CTRL
INJ 7 CTRL
5V REF1
EOP SIG
HO2S LO B1S1
HO2S HI B1S1
MAP SIG
HO2S HI B2S1
HO2S LO B2S1
CHG IND SIG
TP SENS2 SIG
CMP SIG
TP SENS1 SIG
(IN IGNITION COIL JUMPER HARNESS, 5 CM FROM X111 BREAKOUT)
G102 (ON LOWER LEFT FRONT OF ENGINE)
SPARK PLUG
IGNITION COILS (UPPER RIGHT SIDE OF ENGINE)
372438