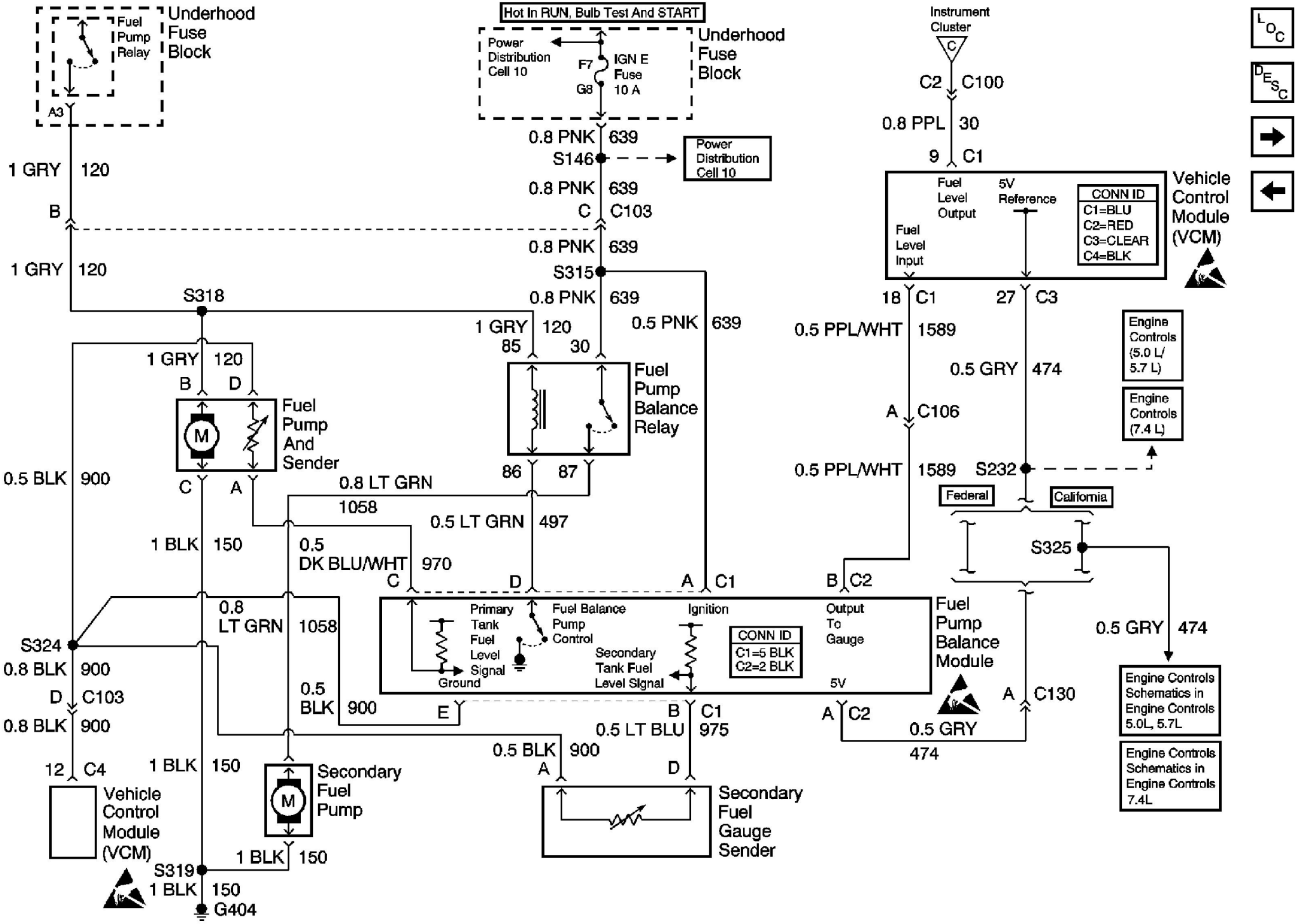
Underhood Fuse Block
Fuel Pump Relay
A3
1 GRY 120
B
1 GRY 120
S318
1 GRY 120
B D
Fuel Pump And Sender
M
C A
0.5 BLK 900
1 BLK 150
S324
0.8 BLK 900
D C103
0.8 BLK 900
12 C4
Vehicle Control Module (VCM)
S319
1 BLK 150
G404
Secondary Fuel Pump
1 BLK 150
Hot In RUN, Bulb Test And START
Power Distribution Cell 10
F7
G8
IGN E Fuse 10 A
Underhood Fuse Block
0.8 PNK 639
S146
Power Distribution Cell 10
0.8 PNK 639
C C103
0.8 PNK 639
S315
0.8 PNK 639
1 GRY 120
85 30
0.5 PNK 639
Fuel Pump Balance Relay
86 87
0.8 LT GRN 1058
0.5 LT GRN 497
0.5 DK BLU/WHT 970
C D A C1
0.8 LT GRN 1058
0.5 BLK 900
E
Primary Tank Fuel Level Signal
Ground
Fuel Balance Pump Control
Secondary Tank Fuel Level Signal
Ignition
Output To Gauge
5V
CONN ID
C1=5 BLK
C2=2 BLK
B C1
0.5 LT BLU 975
0.5 BLK 900
A D
Secondary Fuel Gauge Sender
B C2
A C2
0.5 GRY 474
Fuel Pump Balance Module
A C130
Instrument Cluster
C
C2 C100
0.8 PPL 30
9 C1
Fuel Level Output
5V Reference
Fuel Level Input
CONN ID
C1=BLU
C2=RED
C3=CLEAR
C4=BLK
Vehicle Control Module (VCM)
18 C1
27 C3
0.5 PPL/WHT 1589
0.5 GRY 474
A C106
0.5 PPL/WHT 1589
S232
Engine Controls (5.0 L/ 5.7 L)
Engine Controls (7.4 L)
Federal
California
S325
0.5 GRY 474
Engine Controls Schematics in Engine Controls 5.0L, 5.7L
Engine Controls Schematics in Engine Controls 7.4L