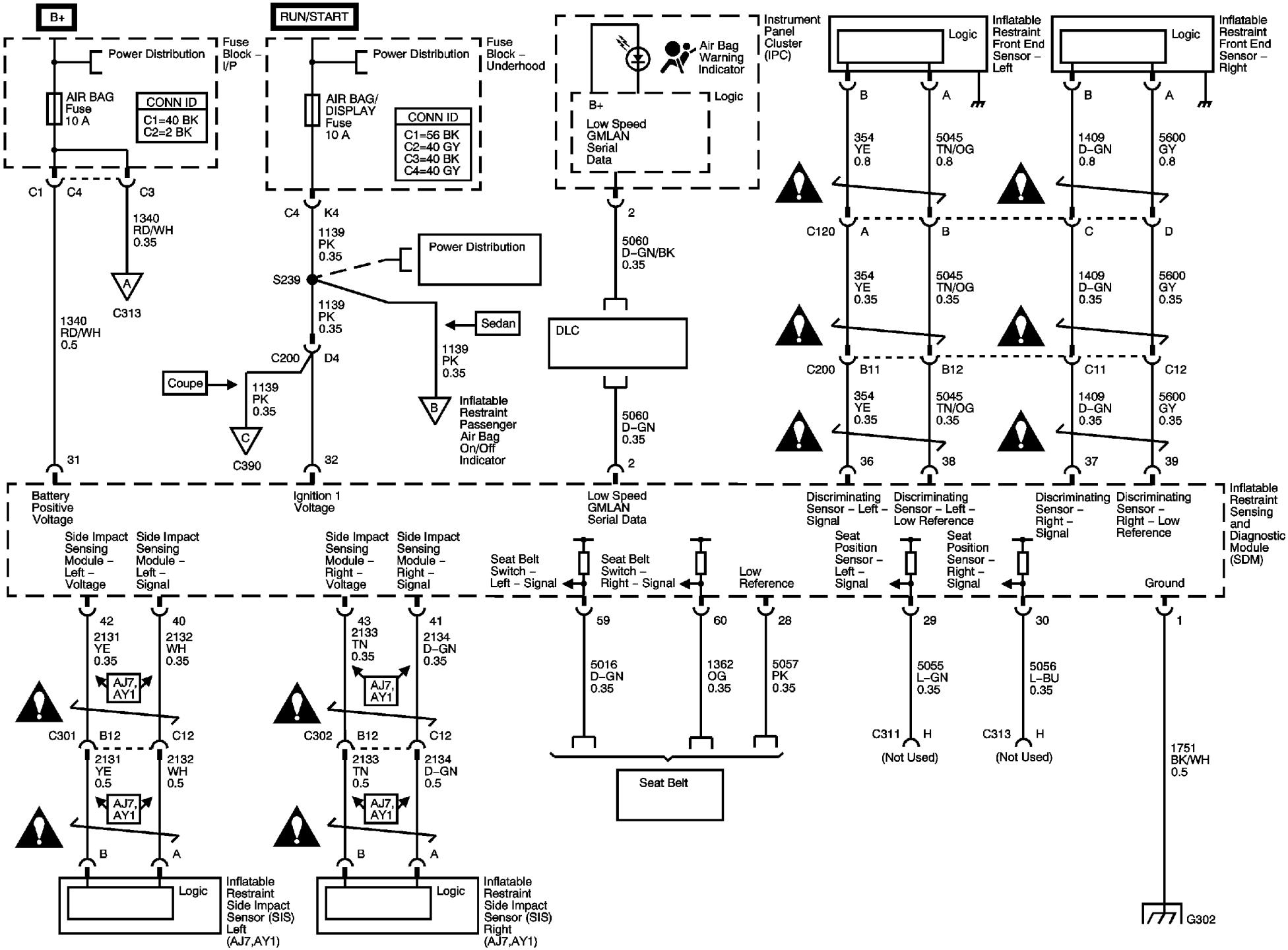
B+
RUN/START
Power Distribution
Fuse Block – I/P
AIR BAG Fuse 10 A
CONN ID
C1=40 BK
C2=2 BK
Power Distribution
Fuse Block – Underhood
AIR BAG/ DISPLAY Fuse 10 A
CONN ID
C1=56 BK
C2=40 GY
C3=40 BK
C4=40 GY
Air Bag Warning Indicator
Instrument Panel Cluster (IPC)
B+
Logic
Low Speed GMLAN Serial Data
Logic
Inflatable Restraint Front End Sensor – Left
Logic
Inflatable Restraint Front End Sensor – Right
C1
C4
C3
1340 RD/WH 0.35
A
C313
1340 RD/WH 0.5
31
C4
K4
1139 PK 0.35
Power Distribution
S239
1139 PK 0.35
Sedan
1139 PK 0.35
C200
D4
Coupe
1139 PK 0.35
C
C390
B
Inflatable Restraint Passenger Air Bag On/Off Indicator
32
2
5060 D-GN/BK 0.35
DLC
5060 D-GN 0.35
2
B
A
354 YE 0.8
5045 TN/OG 0.8
C120
A
B
354 YE 0.35
5045 TN/OG 0.35
C200
B11
B12
354 YE 0.35
5045 TN/OG 0.35
36
38
B
A
1409 D-GN 0.8
5600 GY 0.8
C
D
1409 D-GN 0.35
5600 GY 0.35
C11
C12
1409 D-GN 0.35
5600 GY 0.35
37
39
Battery Positive Voltage
Ignition 1 Voltage
Low Speed GMLAN Serial Data
Discriminating Sensor – Left – Signal
Discriminating Sensor – Left – Low Reference
Discriminating Sensor – Right – Signal
Discriminating Sensor – Right – Low Reference
Inflatable Restraint Sensing and Diagnostic Module (SDM)
Side Impact Sensing Module – Left – Voltage
Side Impact Sensing Module – Left – Signal
Side Impact Sensing Module – Right – Voltage
Side Impact Sensing Module – Right – Signal
Seat Belt Switch – Left – Signal
Seat Belt Switch – Right – Signal
Low Reference
Seat Position Sensor – Left – Signal
Seat Position Sensor – Right – Signal
Ground
42
2131 YE 0.35
40
2132 WH 0.35
AJ7, AY1
C301
B12
C12
2131 YE 0.5
2132 WH 0.5
AJ7, AY1
B
A
Logic
Inflatable Restraint Side Impact Sensor (SIS) Left (AJ7,AY1)
43
2133 TN 0.35
41
2134 D-GN 0.35
AJ7, AY1
C302
B12
C12
2133 TN 0.5
2134 D-GN 0.5
AJ7, AY1
B
A
Logic
Inflatable Restraint Side Impact Sensor (SIS) Right (AJ7,AY1)
59
5016 D-GN 0.35
60
1362 OG 0.35
28
5057 PK 0.35
Seat Belt
29
5055 L-GN 0.35
C311
H
(Not Used)
30
5056 L-BU 0.35
C313
H
(Not Used)
1
1751 BK/WH 0.5
G302

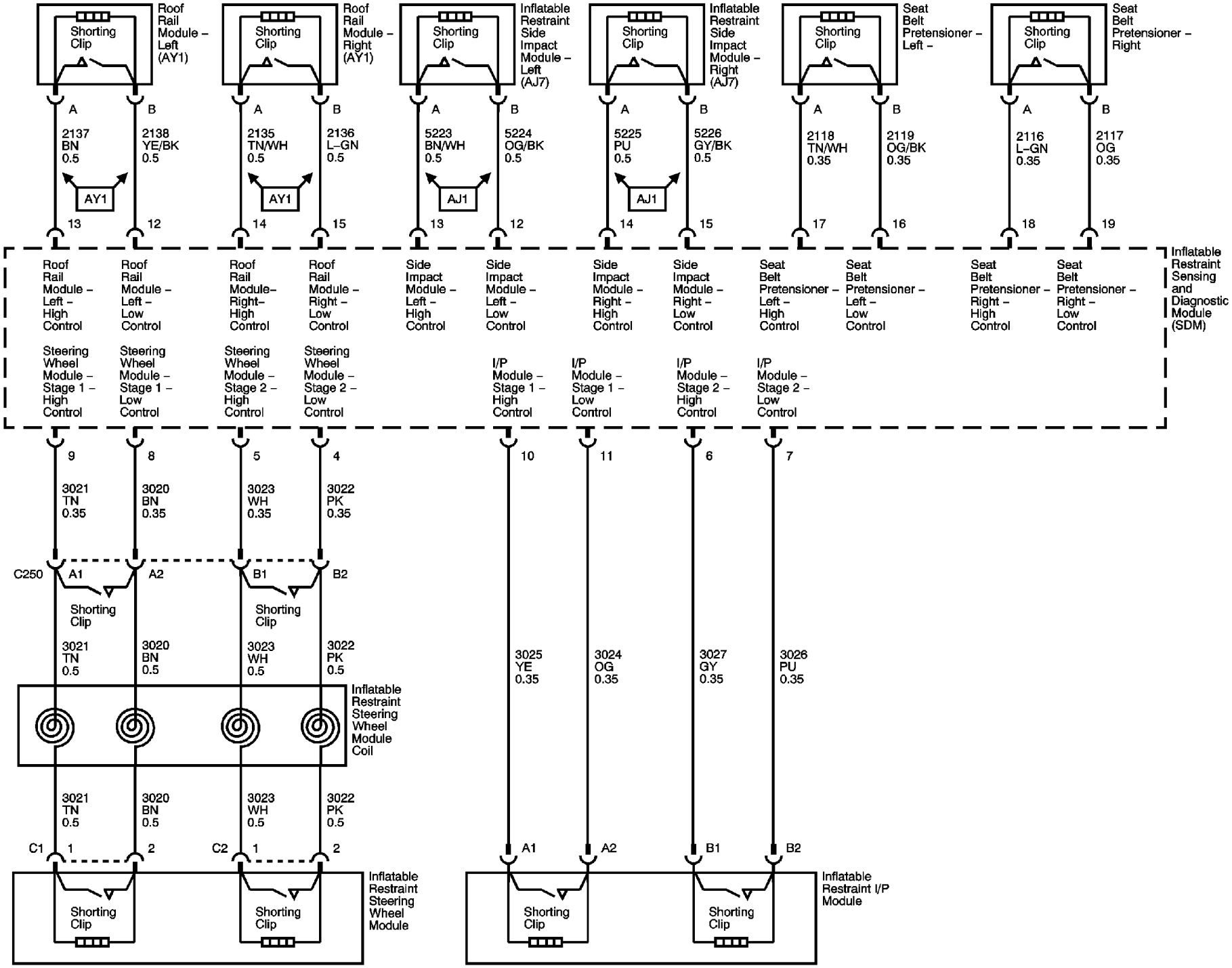
Roof Rail Module – Left (AY1)
Roof Rail Module – Right (AY1)
Inflatable Restraint Side Impact Module – Left (AJ7)
Inflatable Restraint Side Impact Module – Right (AJ7)
Seat Belt Pretensioner – Left –
Seat Belt Pretensioner – Right
Shorting Clip
A
B
2137 BN 0.5
2138 YE/BK 0.5
2135 TN/WH 0.5
2136 L–GN 0.5
5223 BN/WH 0.5
5224 OG/BK 0.5
5225 PU 0.5
5226 GY/BK 0.5
2118 TN/WH 0.35
2119 OG/BK 0.35
2116 L–GN 0.35
2117 OG 0.35
AY1
AJ1
13
12
14
15
17
16
18
19
Roof Rail Module – Left – High Control
Roof Rail Module – Left – Low Control
Roof Rail Module– Right– High Control
Roof Rail Module – Right – Low Control
Side Impact Module – Left – High Control
Side Impact Module – Left – Low Control
Side Impact Module – Right – High Control
Side Impact Module – Right – Low Control
Seat Belt Pretensioner – Left – High Control
Seat Belt Pretensioner – Left – Low Control
Seat Belt Pretensioner – Right – High Control
Seat Belt Pretensioner – Right – Low Control
Inflatable Restraint Sensing and Diagnostic Module (SDM)
Steering Wheel Module – Stage 1 – High Control
Steering Wheel Module – Stage 1 – Low Control
Steering Wheel Module – Stage 2 – High Control
Steering Wheel Module – Stage 2 – Low Control
I/P Module – Stage 1 – High Control
I/P Module – Stage 1 – Low Control
I/P Module – Stage 2 – High Control
I/P Module – Stage 2 – Low Control
9
8
5
4
10
11
6
7
3021 TN 0.35
3020 BN 0.35
3023 WH 0.35
3022 PK 0.35
C250
A1
A2
B1
B2
3021 TN 0.5
3020 BN 0.5
3023 WH 0.5
3022 PK 0.5
3025 YE 0.35
3024 OG 0.35
3027 GY 0.35
3026 PU 0.35
Inflatable Restraint Steering Wheel Module Coil
C1
1
2
C2
Inflatable Restraint Steering Wheel Module
Inflatable Restraint I/P Module

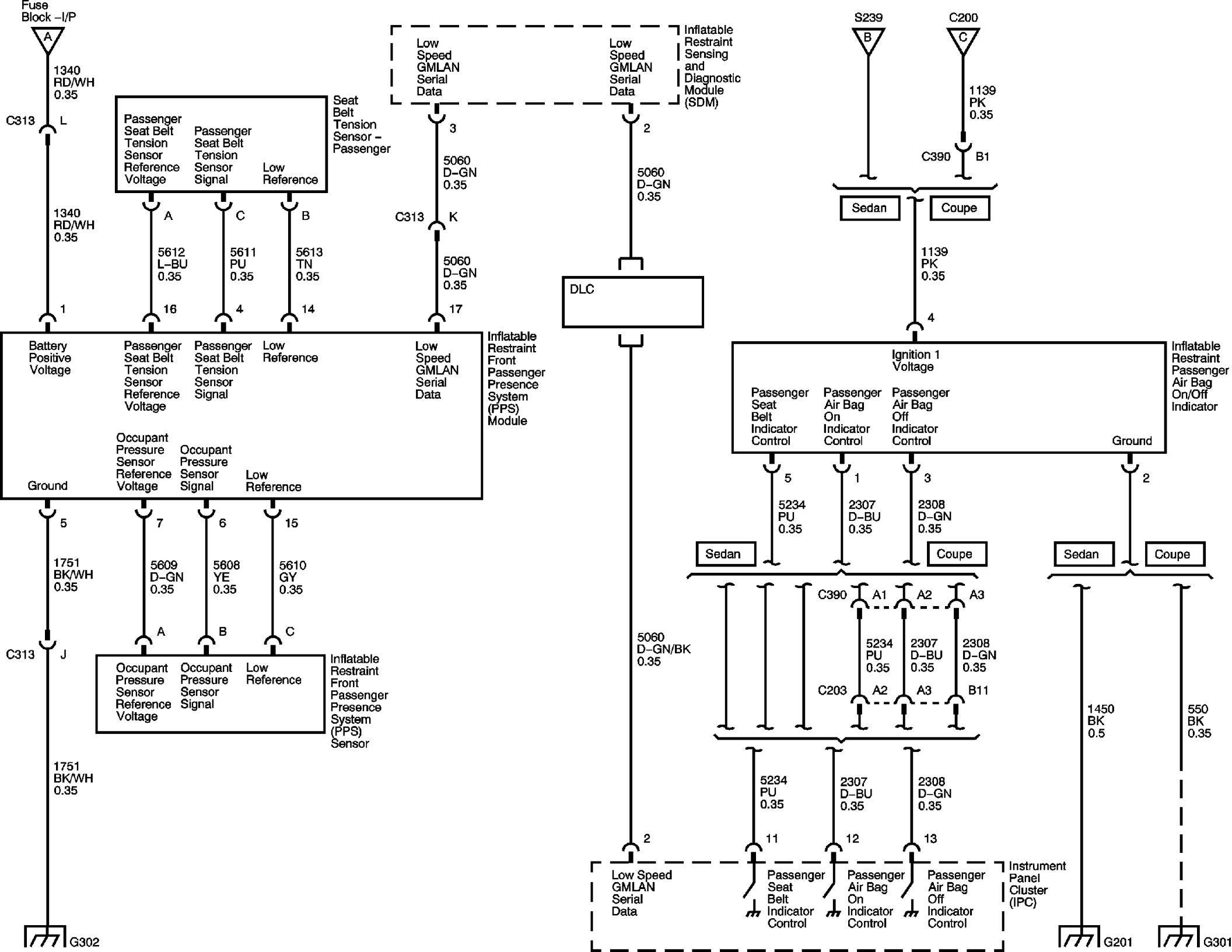
Fuse Block –I/P
A
1340 RD/WH 0.35
C313
L
1340 RD/WH 0.35
Passenger Seat Belt Tension Sensor Reference Voltage
Passenger Seat Belt Tension Sensor Signal
Low Reference
Seat Belt Tension Sensor – Passenger
A
C
B
5612 L–BU 0.35
5611 PU 0.35
5613 TN 0.35
1
16
4
14
Battery Positive Voltage
Passenger Seat Belt Tension Sensor Reference Voltage
Passenger Seat Belt Tension Sensor Signal
Low Reference
Low Speed GMLAN Serial Data
Inflatable Restraint Front Passenger Presence System (PPS) Module
Ground
Occupant Pressure Sensor Reference Voltage
Occupant Pressure Sensor Signal
Low Reference
5
7
6
15
1751 BK/WH 0.35
5609 D–GN 0.35
5608 YE 0.35
5610 GY 0.35
A
B
C
C313
J
Occupant Pressure Sensor Reference Voltage
Occupant Pressure Sensor Signal
Low Reference
Inflatable Restraint Front Passenger Presence System (PPS) Sensor
1751 BK/WH 0.35
G302
Low Speed GMLAN Serial Data
Low Speed GMLAN Serial Data
Inflatable Restraint Sensing and Diagnostic Module (SDM)
3
2
5060 D–GN 0.35
C313
K
5060 D–GN 0.35
5060 D–GN 0.35
DLC
5060 D–GN/BK 0.35
2
S239
B
C200
C
1139 PK 0.35
C390
B1
Sedan
Coupe
1139 PK 0.35
4
Ignition 1 Voltage
Passenger Seat Belt Indicator Control
Passenger Air Bag On Indicator Control
Passenger Air Bag Off Indicator Control
Ground
Inflatable Restraint Passenger Air Bag On/Off Indicator
5
1
3
2
5234 PU 0.35
2307 D–BU 0.35
2308 D–GN 0.35
Sedan
Coupe
Sedan
Coupe
C390
A1
A2
A3
5234 PU 0.35
2307 D–BU 0.35
2308 D–GN 0.35
C203
A2
A3
B11
1450 BK 0.5
550 BK 0.35
5234 PU 0.35
2307 D–BU 0.35
2308 D–GN 0.35
11
12
13
Low Speed GMLAN Serial Data
Passenger Seat Belt Indicator Control
Passenger Air Bag On Indicator Control
Passenger Air Bag Off Indicator Control
Instrument Panel Cluster (IPC)
G201
G301