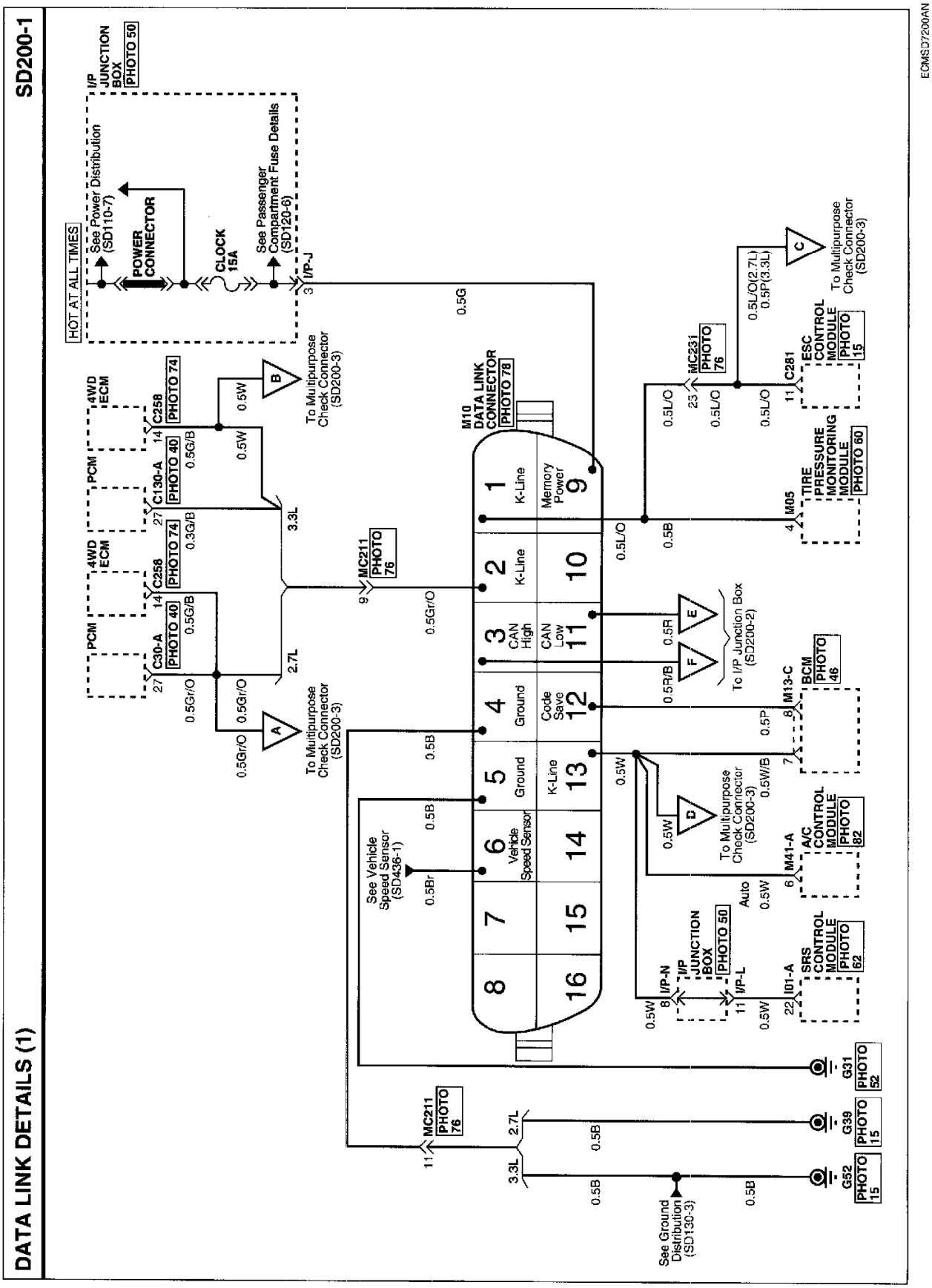

Data Link Details (1)