2010 Chevrolet Impala V6-3.9L

Vehicle > Starting and Charging > Diagrams > Electrical - Interactive Color (Non OE)
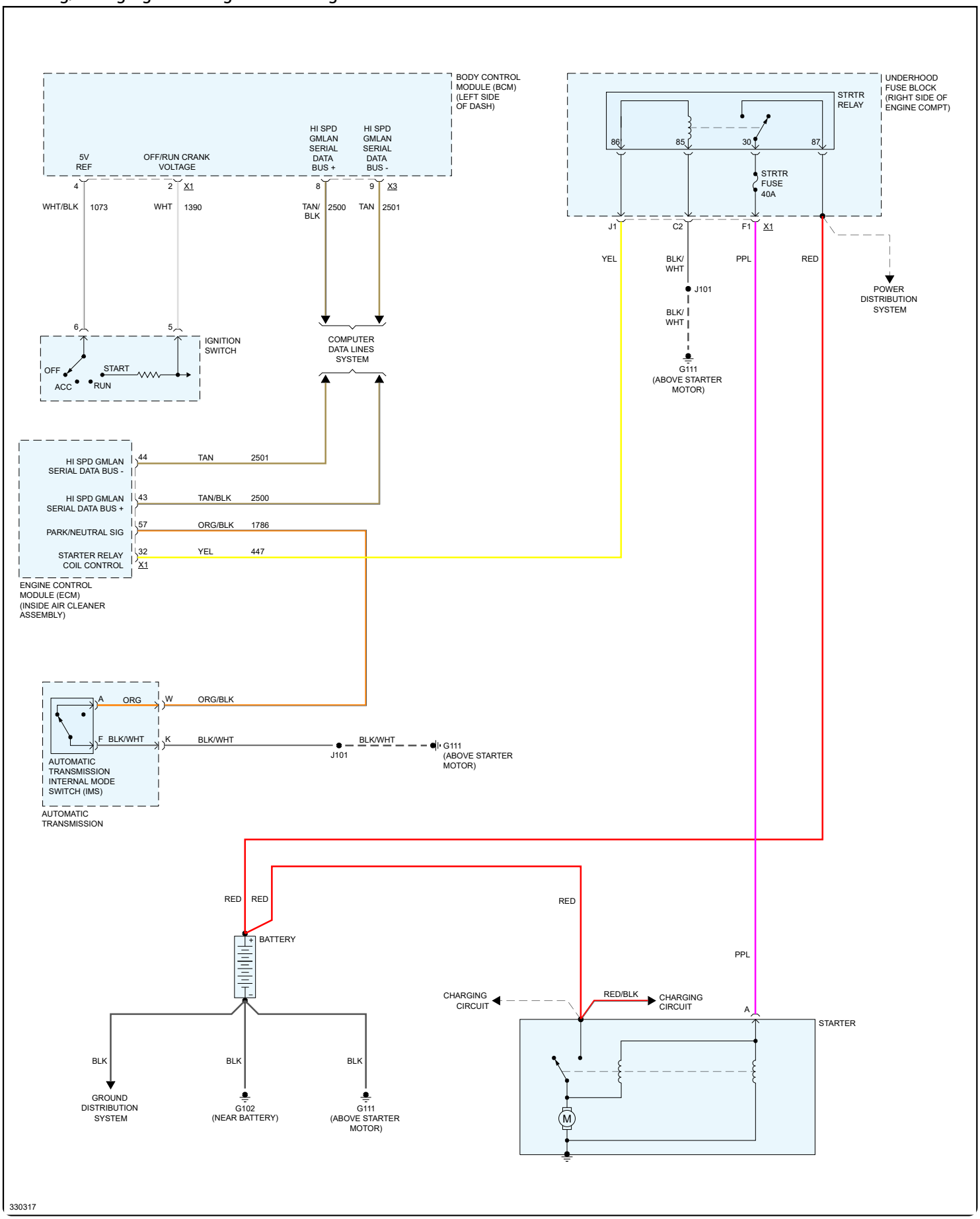
Starting/Charging - Starting Circuit - Page 1 of 1