2000 Jeep Truck Grand Cherokee 2WD V8-4.7L VIN N

Vehicle > Lighting and Horns > Headlamp > Diagrams > Electrical - Interactive Color (Non OE)
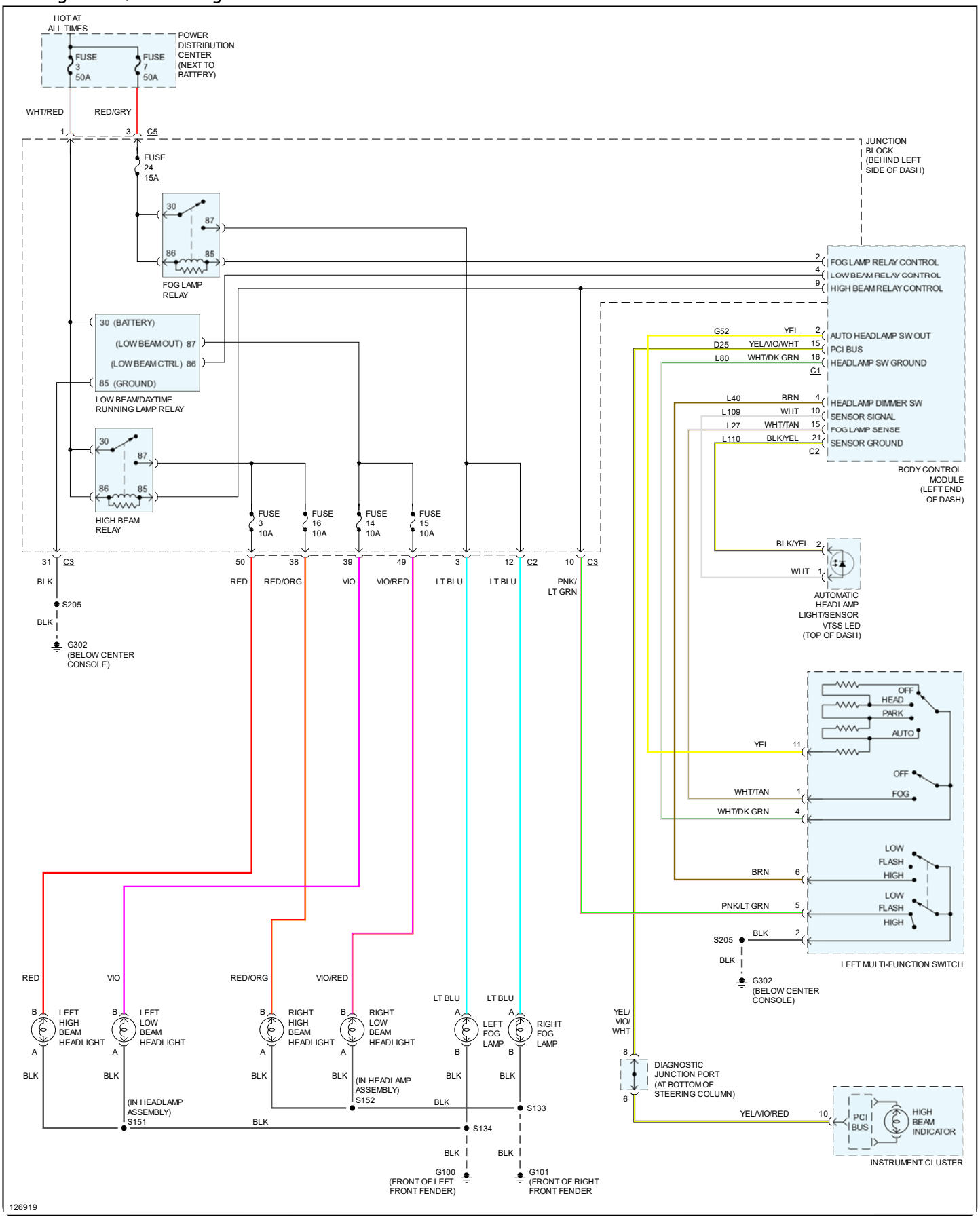
Headlights - W/ DRL - Page 1 of 1