Diagram 1 ANTI-LOCK BRAKE SYS...

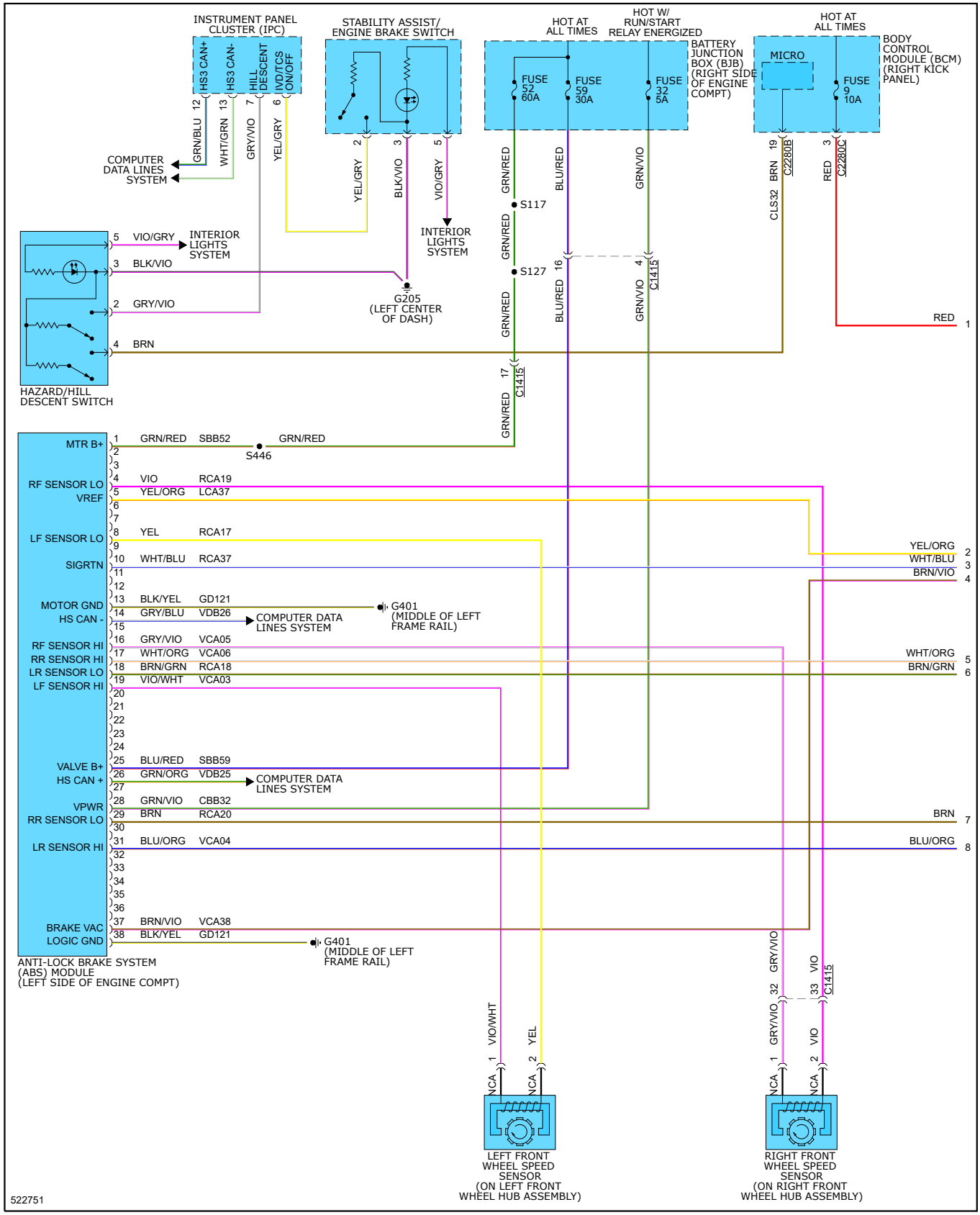

Copyright 2001-2022 Identifix, Inc. All rights reserved.