Fig. 16: Exterior Lamps Circuit

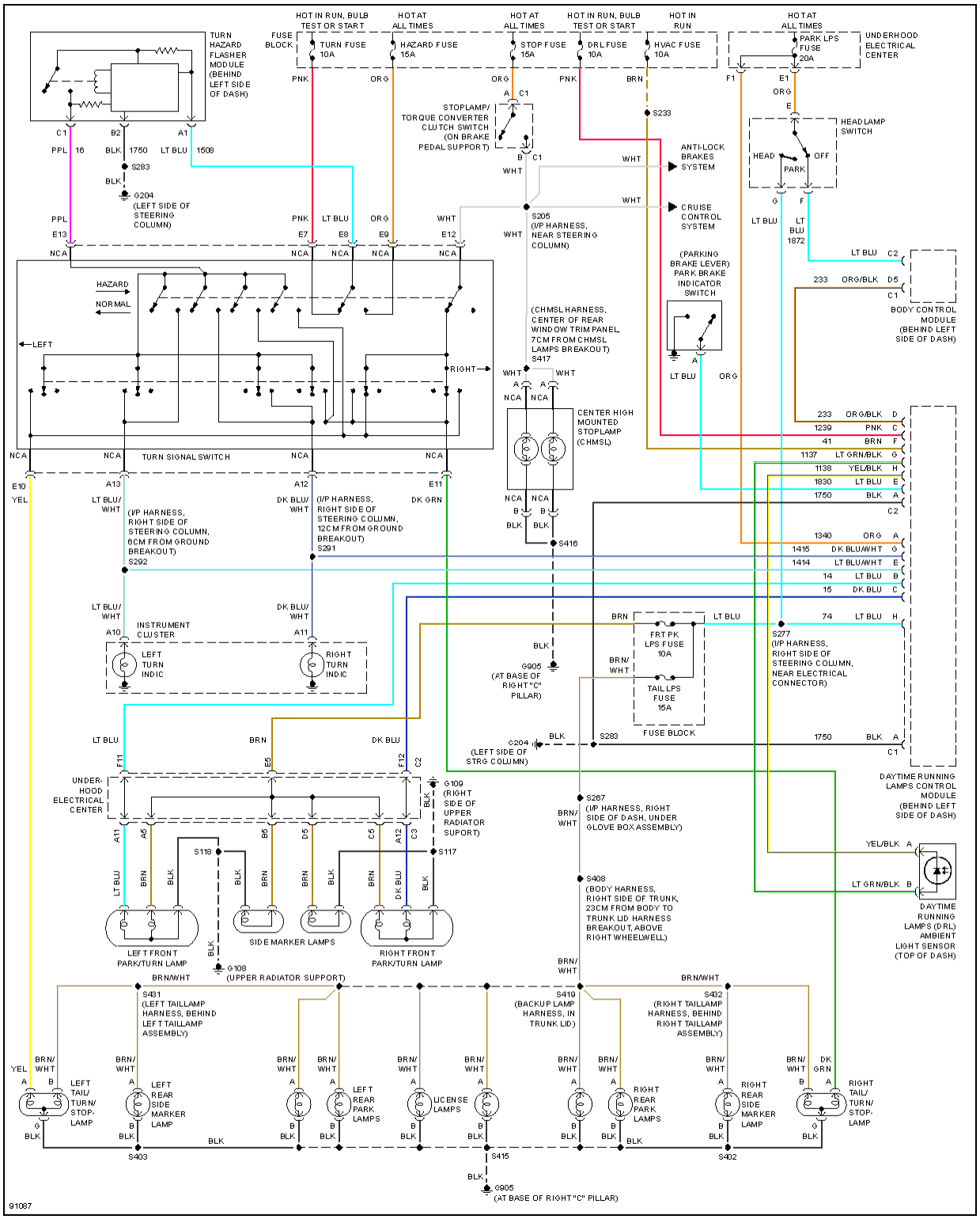

© 2011 Mitchell Repair Information Company, LLC.